Text for tender documents, product description

CAEMA Rite-Hite Hydraulic Dock Leveller with Telescopic Lip
Model: CHVB-S 9000

Telescopic Lip 500 mm

Dimensions:

Nominal width	**NB:**	XXXX mm
Nominal length	**NL:**	XXXX mm
Telescopic lip extended	**V :**	500 mm
Tapered lip	**VB:**	XXXX mm
Total length	**L :**	NL+V mm
Service range up	**O :**	XXXX mm
Service range down	**U :**	XXXX mm
Closed height	**H :**	XXXX mm
Capacity	**T :**	XXXX kN

(XXXX see quotation or tender document)

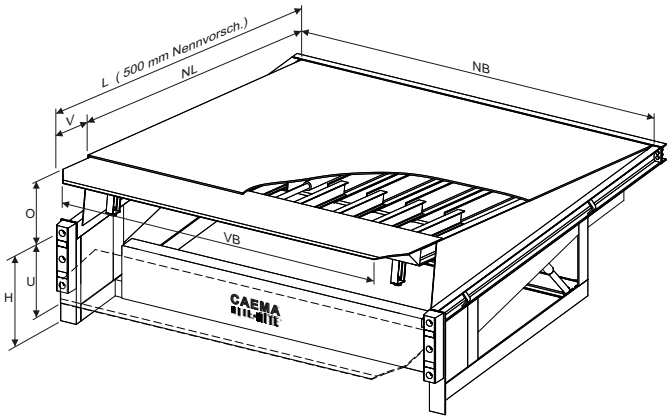

Dock Leveller CHVB-S 9000	NL (mm)	V (mm)	L (mm)	O (mm)	U (mm)	H (mm)	NB (mm)	VB* (mm)	Tapered Lip (mm)
	2000	500	2500	350	350	620	(o.r.) 1500	1500	Option
	2500	500	3000	350	350	620	1750	1750	Option
	3000	500	3500	400	400	720	2000	2000	Option
	3500	500	4000	420	450	820	2250	2000	2/125/190
	4000	500	4500	400	500	900	2400	2000	2/200/340
add-on	4500	500	5000	400	550	900	(o.r.) on request		
							VB* applies for all nominal lengths (NL)		

Standard Features:

CE and GS certificated
Compliant with BGR 233 and EN 1398
SMOOTH REAR HINGE TRANSITION
Anti-slip deck plate, tread plate
Telescopic lip segment guided by 4 roller bearings
Hydraulic system includes:
• Hydraulic emergency stop
• Automatic height adjustment
Electrical system includes:
• Dock control, 400/230V, 24V secondary voltage
• Automatic stop after power failure or emergency stop
• Power cables adjusted to pit size
Steel construction painted RAL 7016
Yellow/black warning stripes on integral toeguard
Front curtain out of black PVC
2 Rubber bumpers 400x90x80 mm

Options:

☐ Dock control with automatic return
☐ Telescopic lip with sliding segments instead of tapered lip
☐ Dock box
☐ Zinc-plated finish
☐ Weatherseals
☐ Foam insulation - Styrodur
☐ IGLU 1600 insulation - ISO panel
☐ Abrasive ramp surface - KVS
☐ RAL colour of choice
☐ Rubber bump. 500x250x80 mm
☐ Rubber bump. 500x250x140 mm
☐ Steel bumper model _____
☐ Other: _____

Remark: Other dimensions, features and options are available on request!

CAEMA reserves the right to make product improvements without prior notice. All dimensions are in mm.

CAEMA Verladesysteme GmbH • Carl-Zeiss-Straße 3 • 34471 Volkmarsen • Germany • Tel. +49 (0)5693 9870-0 • Fax +49 (0)5693 9870-20
E-Mail: info@caema-ritehite.com • Internet: www.caema-ritehite.com